# FLOOR INLET “AT-FI150”



## TECHNICAL FEATURES

- Stainless steel floor inlet for swimming pools.
- Made of AISI-316L stainless steel.
- Corrosion resistant.
- Easy to install.
- Suitable for concrete and liner installations.

## TECHNICAL SPECIFICATIONS

| | |
|---|---|
| **Material** | AISI-316L stainless steel |
| **Pool type** | Concrete and liner |

## MODELS

| CODE | MATERIAL | SIZE | THREAD | CONNECTION |
|---|---|---|---|---|
| AT-FI150-20 | AISI-316L stainless steel | Ø150 x H58 mm | External thread G2" | 2" |

## OVERALL DIMENSION

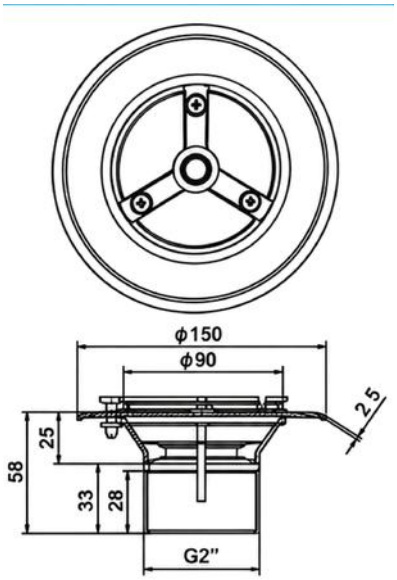


*Dimensions in mm. Specifications are subject to change without notice.*