VACUUM FITTING “AT-VF118”



TECHNICAL FEATURES

- Vacuum fitting for swimming pools.
- AISI 316L stainless steel cover with ABS body.
- 2" glue type (solvent weld) connection.
- Overall size Ø 118 × H 66.5 mm.
- Available in two versions (see technical data).



AT-VF118-316
316L cover + ABS back



AT-VF118-316C
ABS body, cover 316L only

TECHNICAL DATA

MODEL CODE	DESCRIPTION	COVER	BODY	CONNECTION	DIMENSIONS (mm)
AT-VF118-316	316L cover + ABS back, glue type	AISI 316L	ABS	2" glue	Ø 118 × H 66.5
AT-VF118-316C	ABS body, cover 316L only, glue type	AISI 316L	ABS	2" glue	Ø 118 × H 66.5

OVERALL DIMENSION

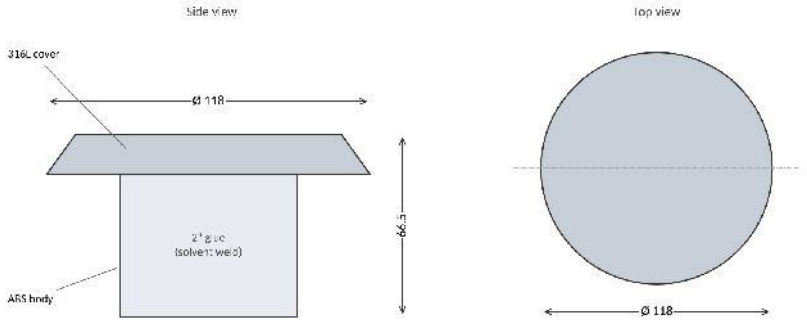

Indicative drawing based on the main dimensions; dimensions in mm.

Images are indicative: stainless steel (316L) parts are shown in steel colour as per the specification. Specifications are subject to change without notice.